Material: Nylon 66 UL 94V-2
Color Ivory

Ordering Code:

CI31 ** S 00R0
① ② ③ ④

① Series No.
② No. of Circuits
③ S= Connector housing
④ option: 00R0= Polarzing Ribs Type

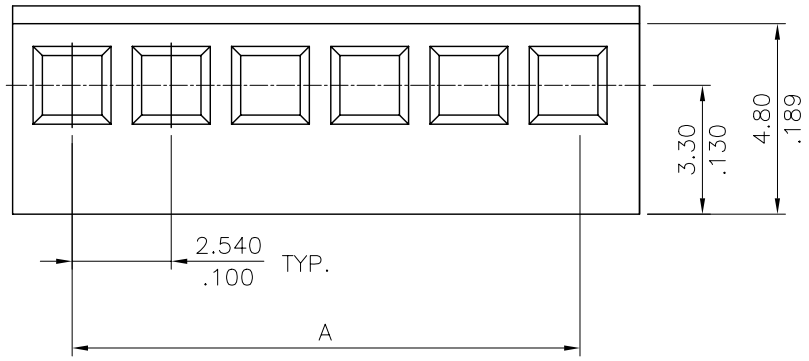

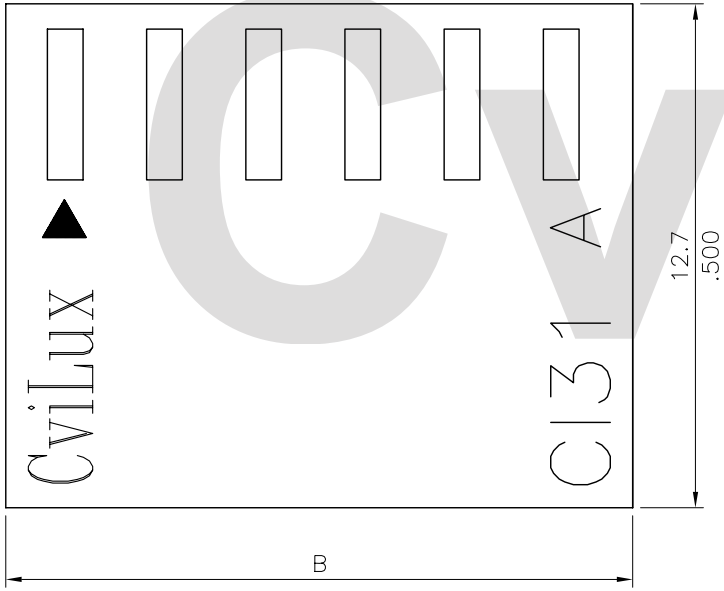

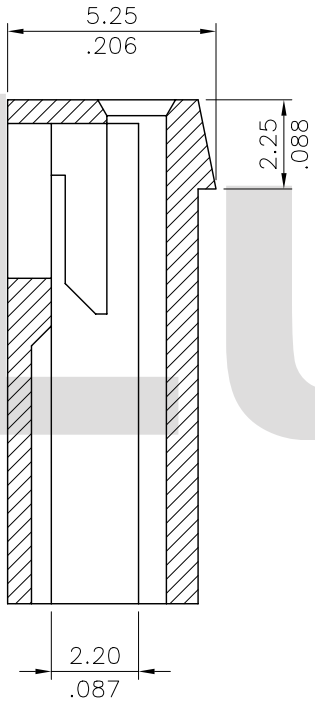

Circuits	Dimension	
	A	B
2	2.54(.100)	5.6(.221)
3	5.08(.200)	8.1(.319)
4	7.62(.300)	10.7(.421)
5	10.16(.400)	13.2(.520)
6	12.70(.500)	15.8(.622)
7	15.24(.600)	18.3(.721)
8	17.78(.700)	20.8(.819)
9	20.32(.800)	23.4(.921)
10	22.86(.900)	25.9(1.020)
11	25.40(1.000)	28.5(1.122)
12	27.94(1.100)	31.0(1.221)
13	30.48(1.200)	33.5(1.319)
14	33.02(1.300)	36.1(1.416)
15	35.56(1.400)	38.6(.1.520)
16	38.10(1.500)	41.2(1.622)
17	40.64(1.600)	43.7(1.721)
18	43.18(1.700)	46.2(1.819)
19	45.72(1.800)	48.8(1.921)
20	48.26(1.900)	51.3(2.020)

RoHS Compliant

SYM	NAME	DATE	REVISIONS
4			
3			
2			
1			

CVILUX.CORP 2002.03.21 ISSUED

		DATE
DRAWN BY:	Eisley	03/21-02'
ENGINEER:	David	03/21-02'
CHECKED BY:	David	03/21-02'
APPROVED BY:	Alex	03/21-02'

UNIT: mm / inch

TOLERANCE UNLESS OTHERWISE SPECIFIED

.X ± 0.30/.012	X.° ± 1°
.XX ± 0.20/.008	.X° ±
.XXX ± 0.10/.004	.XX° ±

TITLE: 2.54MM(.100") CRIMP TERMINAL HOUSING

MATERIAL:

FINISH:

瀚荃股份有限公司
CviLux Corporation

DRAWING NO.	CI3117SA	PART NO.	CI31**S00R0
SCALE	5 / 1	SHEET 1 OF 1	

CviLux